PowerMesh – Design Plan

Project Title: PowerMesh – Matter-over-PLC smart-home infrastructure
Team Members: David Bickram, Steven Pham, Bryan Gonzalez, Logan Dukes, Daniel Goldenberg

Date: 3/24/2026

Terminology:

- **PLC** → Power Line Communication
- **MCU** → Microcontroller Unit
- **Home Assistant** → Open Source Software with Matter Integration. Not to be confused with an actual home assistant like Alexa

1. Introduction

1.1 Purpose / Need

PowerMesh is a solution to the wireless mesh instability problem. Convenience has been a guiding factor in smart home products, with wireless systems like Thread and Wi-Fi being the most widely adopted technologies. However, the wireless infrastructure isn't without its faults, with difficulty of installation, network instability, and security concerns being the most prominent.

All these issues are a result of the always-on-network conundrum, where all smart devices must always be connected to the wireless network, and once network issues occur, the entire smart infrastructure goes down. PowerMesh hopes to tackle this by having PLC-based infrastructure that won't require wireless connectivity, which in return will simplify smart device adoption for consumers by avoiding the barrier of wireless connectivity entirely.

1.2 Domain & Prior Art

The field we are specifically targeting is the smart home industry, where wireless technology is prevalent and the product installation is an annoyance. Examples of products in the space are wireless lights (bulbs, strips, and lamps) and home assistants like Alexa.

More specific to our product methodology, PLC technologies that exist but are not often used are X10 connectors [1]. This protocol was a simplified control system for lights in a house. Issues that plagued the technology were a lack of encryption and addressing capabilities, with a limit of 256 devices. This standard is quite antiquated, but it hasn't been improved upon in decades, so we hope to implement a modern and stable alternative.

1.3 Impact & Risk Assessment

Our project will improve societal standards for consumer-grade products by giving consumers control of their smart device networks at home by providing an open hardware and software alternative. We are tackling large infrastructural issues with our project, so potential risks could be compromising consumer security through development oversights or not having reproducible results with the various smart devices in existence, which could limit our adoption.

Economically, our project provides developers with a way to produce low-cost microcontroller systems with existing powerline infrastructure, with those low costs hopefully being reflected in consumer pricing. With our emphasis on using PLC in our project, we are leveraging the existing technology around homes, minimizing the need for new infrastructure that could impact the environment. Social impact is a driving point in our project, specifically encouraging user privacy in our infrastructure as we move away from the more vulnerable wireless systems.

2. Statement of Work

2.1 Project Overview

2.1.1 General Specifications

- Have a PLC-based infrastructure of smart devices that can be remotely controlled via Home Assistant interface with Matter
- Target Smart Device: LED Lightbulbs (aka. multiple receivers)
- The client and server side will use the ST8500 IC to communicate via the powerlines sending data to configure the smart home devices
- Matter: Allows operation of multiple devices from different manufactures such as Google, Apple, and Amazon. [2]. This allows us to integrate with products that dominate the market and new arriving products that will follow suit with Matter.

2.2.2 Hardware Requirements

- Client-sided: Use existing smart device circuitry and integrate our custom PLC/ST circuitry into the product, essentially creating our own lightbulb from the existing bulb circuitry. The goal is to have multiple receivers connected to the same transmitter. Uses ST8500 and STM32.
- Server-sided: Integrate PLC/ST circuitry with either a raspberry pi or desktop computer serially. Create a plug-and-play hub with USB. This will communicate with the Home Assistant application to the single/various receivers.
- Networking: Integrate TCP/IP-style communication between devices targeting 3-5 byte per second payload speeds for our LED lightbulb following the IEEE 1901.2 standard. We will be using I2C-style node addressing to communicate with the different receiver nodes using our custom standard.
- Power Consumption: Targeting less than 33kW a year including the LED bulb (13 kW a year) [4] and our ST8500 (20kW) [5]

2.1.3 Software Requirements

- <u>MCU</u>:
  - Languages: C, C++
  - Frameworks: TCP/IP (FreeRTOS/ LWIP), FreeRTOS
  - Build Systems: Cmake, Make
- <u>User-Application:</u>
  - Languages: Python
  - Frameworks: Home Assistant
- <u>General</u>:
  - Linux (Debian) for hub system
  - ARM cross-compiler targeting ARM Cortex-M ST8500/STM32

2.2 Secondary Features

- **Thread Integration:**Matter supports Thread, which allows for wireless communication with certain devices that our technology could potentially not reach. This allows the possibility of having a smart home using both wired and wireless smart devices.

2.3 Milestones and Task Allocation

- **Information gathering (This Week & Spring Break)**
  - Research previous groups efforts
  - Determine required hardware components (STM32, STM8500, etc.)
  - IEEE 1901.2, Matter, Home Assistant

- **Prototype Bring-up (March - April)**
  - Acquire our hardware development kits (STM-Nucleo/Evalboard)
  - Breadboard the basics required for having a communication interconnect between our server and the client prototype smart device
  - Have basic Home Assistant integration with some compatible software
- **Validation (Throughout Design Process)**
  - Testing code
  - Documentation
  - Matter PLC communication standard Design **(Fall Semester)**

- **Final Prototype Targeting (Fall Semester)**
    - Establish connection with industrial smart bulb and properly control via PLC infrastructure
    - Have our smart device rendition PCB
    - Thread Integration **(Secondary Goal)**

2.4 Work to Complete This Semester

1) Have a clear demonstration of sending and receiving packets on both endpoints
2) Some sort of client-side equipment functions with received packets
3) Client-side equipment works with transferable interface

2.5 Work to Complete At End of Term

1) Multi-colored lightbulb works with packet data
2) Working with Home Assistant
3) Custom PCB integration for lightbulb example
4) Established communication protocol and submit Matter certification

3. Deliverable Artifacts

Smart Device Design/Circuitry: This artifact will either be our client hardware connected to the existing circuitry of an LED bulb or a custom LED bulb/hardware that can interact with the hub. Once we are confident in its capabilities, we will integrate it with existing lightbulb technology. The software for the device will be open-source, and the hardware design will be available to replicate on existing Matter smart devices.

Hub Design: The hub design is central for the PLC network; it will control communication between the various devices on the network. With the hub we plan on having a desktop-oriented design for testing purposes, which we'll move to custom PCB hardware for the final product. For redistributing this hub, we would need to recreate a replica of the hardware, and its software will be open-source.

Home Assistant Interface: This aspect of the project connects the hub and the user-application interface that'll use Home Assistant with the Matter protocol. This will be usable via a desktop computer or a mobile device. We'll distribute this via a standard HTTP website that we can test and then improve upon with new plugins. There are no concerns with the Home Assistant software's availability, as it's constantly being updated, and its plugin flexibility allows people to expand compatibility to their own smart device products.

4. Mockups

4.1 Interfaces

For PowerMesh, the singular interface is expected to be the Home Assistant control platform running on the hub. The rest of the project will rely on the plug-and-play aspects we hope to create for our users with our hub.

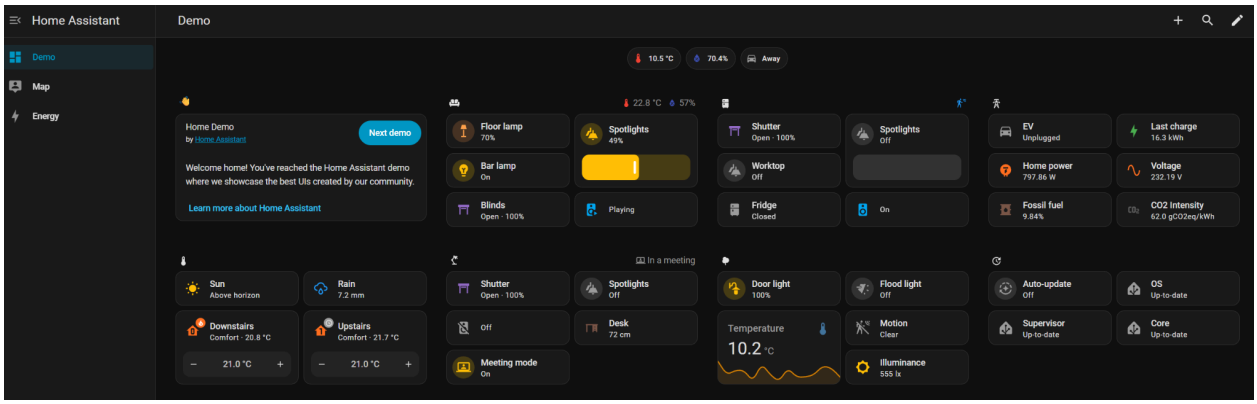

Figure 1. Home Assistant Dashboard

4.2 Systems

The project contains three major subsystems: the hub, the PLC network path, and the wall node. The hub manages commissioning, user commands, and logging. The PLC path carries framed traffic across the mains and reports link-health data. The wall node hosts the device application and maps it to the transport.

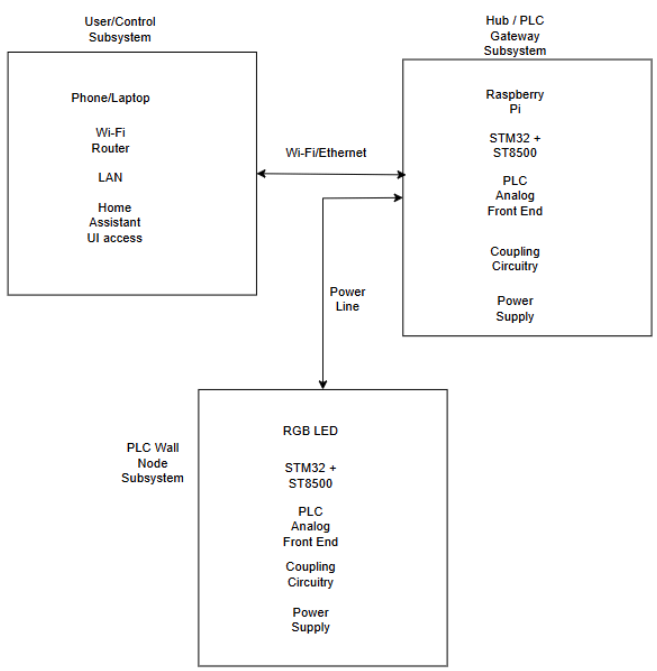

Figure 2. Subsystem Hardware Components

4.3 Networking Model

The PowerMesh networking architecture consists of a hub communicating with embedded wall nodes over PLC, with Home Assistant on the Raspberry Pi serving as the primary control interface. The communication architecture diagram illustrates the end-to-end device interaction across the system, while the protocol layer diagram shows how application commands are translated through the Matter/IP and PLC layers into physical transmissions over the power line network.

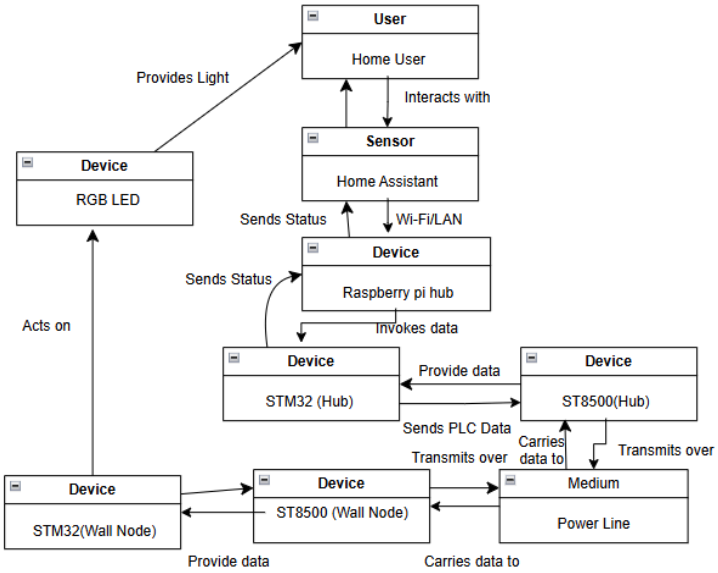

Figure 3. High Level Communication Architecture

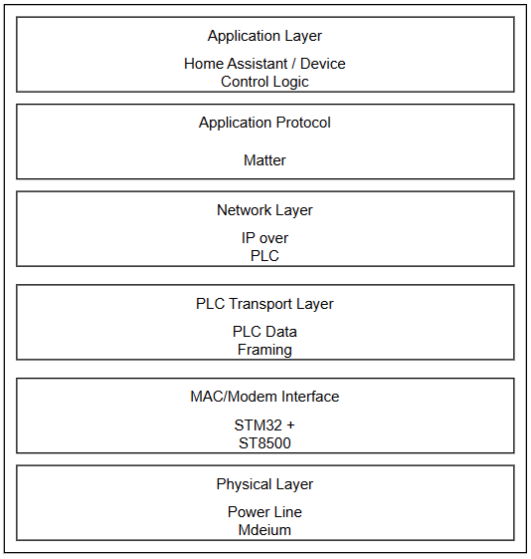

Figure 4. Protocol Layer Diagram

4.4 Storyboards

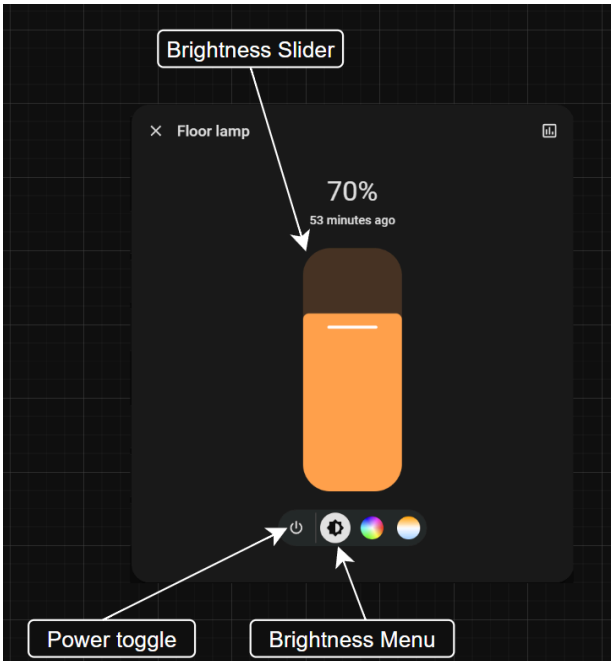

Figure 5. Home Assistant light brightness control

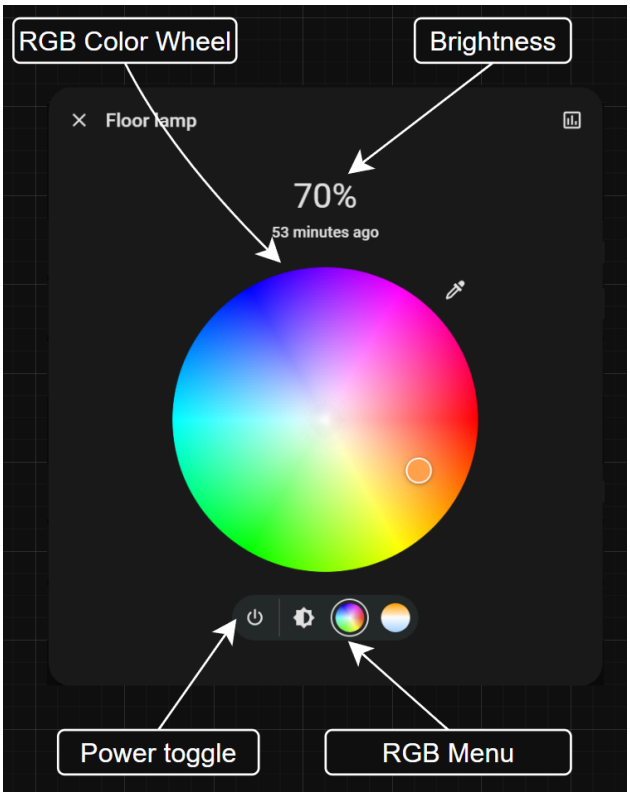

Figure 6. Home Assistant RGB color control

4.5 Draft Schematics

This schematic provides an overview of our MCU infrastructure that we'll use on the smart device endpoint.

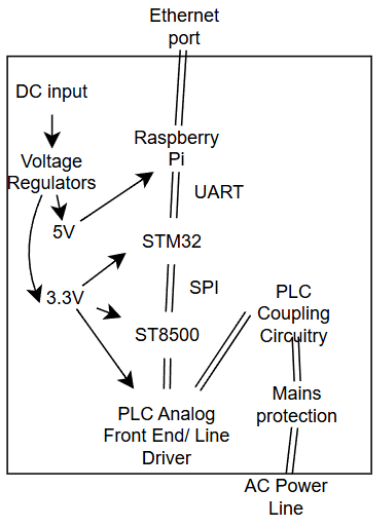

Figure 7. Schematic of the Hub

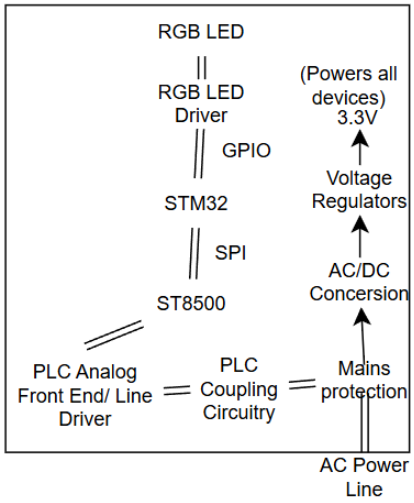

Figure 8. Schematic of the Wall Node

References

[1]"PLC01 Powerline Repeater X10," *X10.COM*, 2020. https://www.x10.com/products/plc01 (accessed Mar. 12, 2026).

[2]"Matter FAQs | Frequently Asked Questions," *CSA-IOT*. https://csa-iot.org/all-solutions/matter/matter-faq/

[3] Home Assistant, "Home Assistant," *Home Assistant*, 2019. https://www.home-assistant.io/

[4] "How Much Electricity Does A LED Light Bulb Use? [2025 Guide]," *SolarTech*, Aug. 22, 2025. https://solartechonline.com/blog/how-much-electricity-led-light-bulb-use/

[5] "ST8500 | Product - STMicroelectronics," *STMicroelectronics*, 2024. https://www.st.com/en/interfaces-and-transceivers/st8500.html#documentation (accessed Mar. 23, 2026).